Inox High Flow Filter Housings

Single Cartridge and Multi-Cartridge

Providing filtration solutions for particulate removal up to 9,100 lpm, the Inox high flow housing range and specially designed SPECTRUM high flow filter cartridges offer key advantages over regular diameter cartridges. With lower capital costs than equivalent regular diameter set-ups, the higher dirt-holding capacities also allow for fewer changeouts and in turn reduced manpower and system downtime. This Inox housing range accepts most marketplace high flow cartridges but is engineered to provide optimum results with the SPECTRUM Premier Pleat High Flow filters (PPP-HF & PPG-HF).

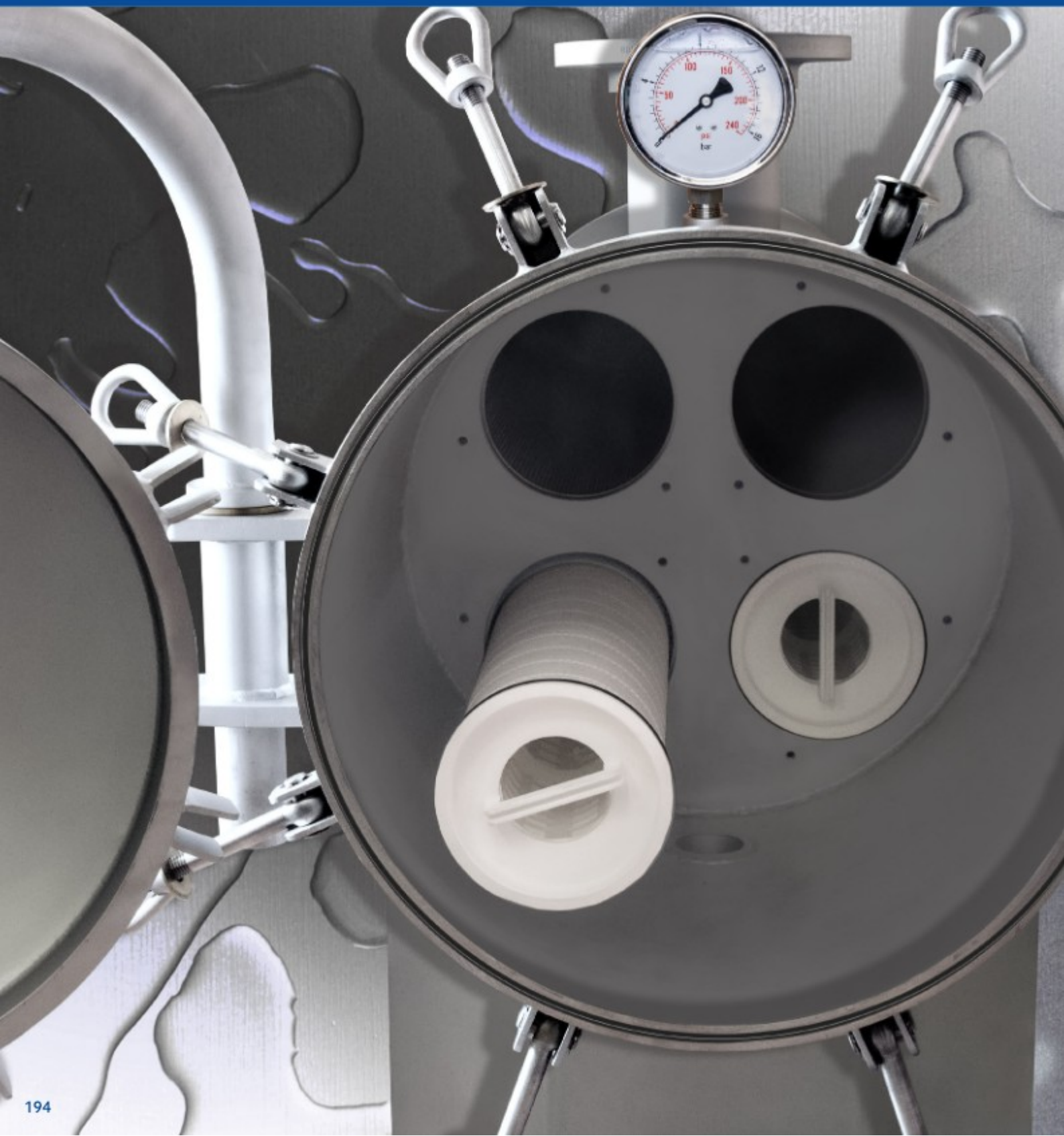

Flows up to 9,100 lpm

Starting with the single round vessels capable of achieving flows over 1300 lpm through to the enormous 9,100+ lpm capabilities of the 7 round, this range has the operator in mind with Davit arm assemblies on larger vessels providing safe and simple opening/closing of the housing. Cartridge handling is swift and requires less manpower with the cartridges inserted into defined positions for ease of operation.



Which Size Housing?

SPECTRUM High Flow housings range in size from 1 round to 7 round, with flow rates from 1300 to 9,100 litres per minute.



1 Cartridge

up to 1300 lpm

Comparable to a 21 x 30" housing



2 Cartridges

up to 2600 lpm

Comparable to a 36 x 40" housing

4, 6 & 7 Cartridges

5200 - 9,100 lpm

Comparable to 2x36 round 40" housings and upwards



High Flow vs Traditional Cartridges

Enhanced Design

- Offers up to 350% higher flowrate than regular diameter cartridge alternatives
- Reduced footprint can provide the perfect solution to limited floorspace installations
- Swing-bolt closures allow tool-free changeout, significantly reducing valuable labour time

Reduced Costs

- Engineered housings allow higher flow rates in a comparably smaller design offering significant cost savings
- Replacement high flow cartridges can cost over 80% less than regular diameter cartridges for the same flow rate system

1 Cartridge *1300 lpm*



1 High Flow Cartridge

VS

13 Pleated Cartridges *(40" Length)*

2 Cartridges *2600 lpm*

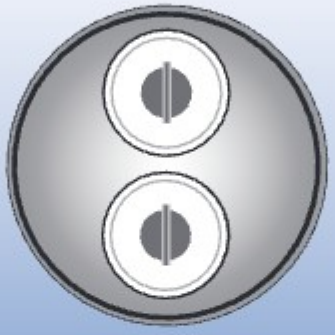

2 High Flow Cartridges

VS

26 Pleated Cartridges *(40" Length)*

4 Cartridges *5200 lpm*



4 High Flow Cartridges

VS

52 Pleated Cartridges *(40" Length)*

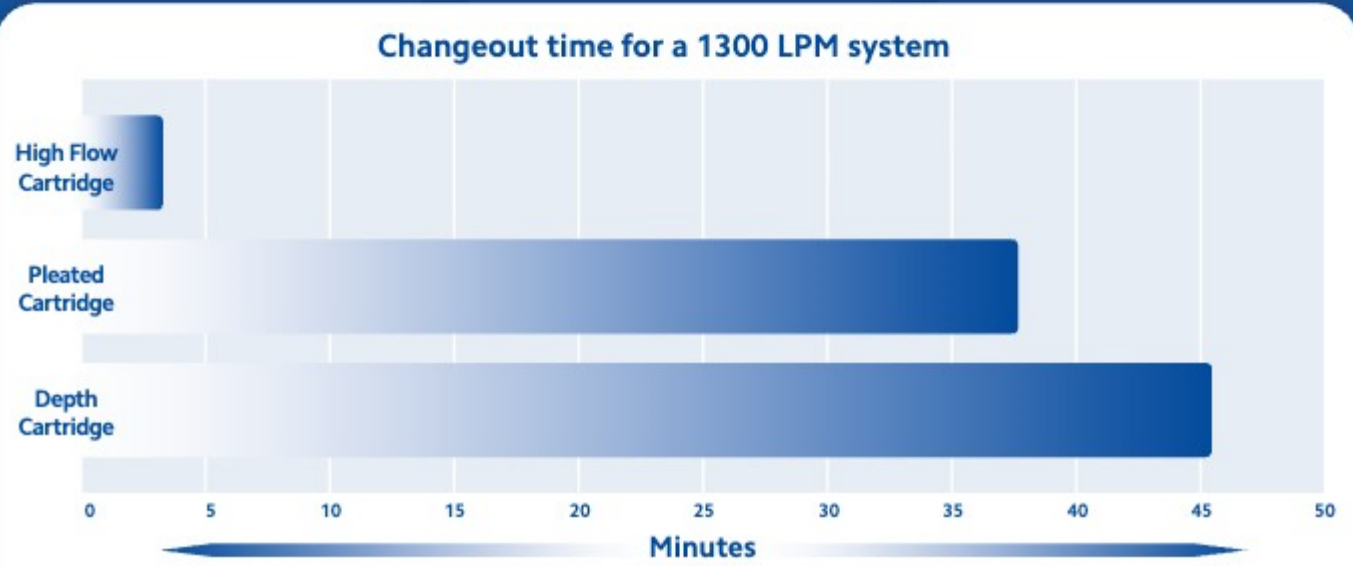

Higher Dirt Holding

- Increased surface area and multi-layered graded density filter matrix provides greater dirt holding capacity
- A single 40" high flow cartridge can hold as much as 7kg of dirt, equivalent to almost 5 x 40" regular cartridges
- Increased dirt holding capacity results in fewer changeouts and less system downtime

Simple to Install

- Simple to install, high flow cartridges have an ergonomic and robust handle for easy changeout
- 6" diameter pleated design creates massive surface area allowing huge flow rates and low pressure drops
- Inside-to-out flow pattern ensures particulate is retained within the cartridge during changeout

6 Cartridges *7800 lpm*

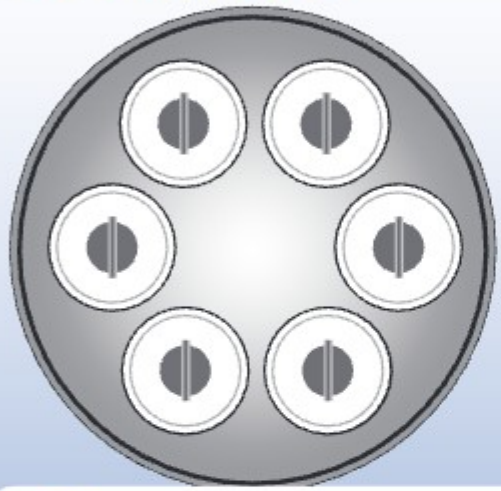

6 High Flow Cartridges

VS

78 Pleated Cartridges
(40" Length)



7 Cartridges *9100 lpm*

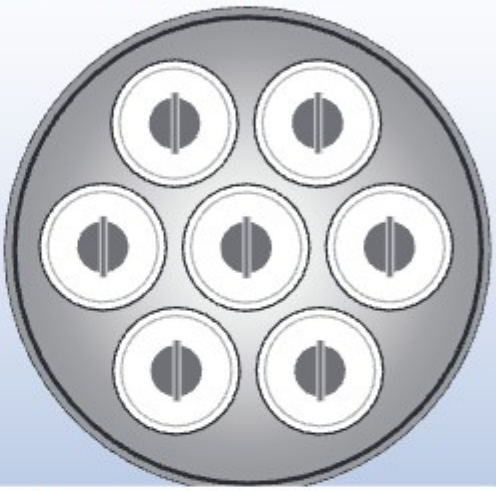

7 High Flow Cartridges

VS

91 Pleated Cartridges
(40" Length)

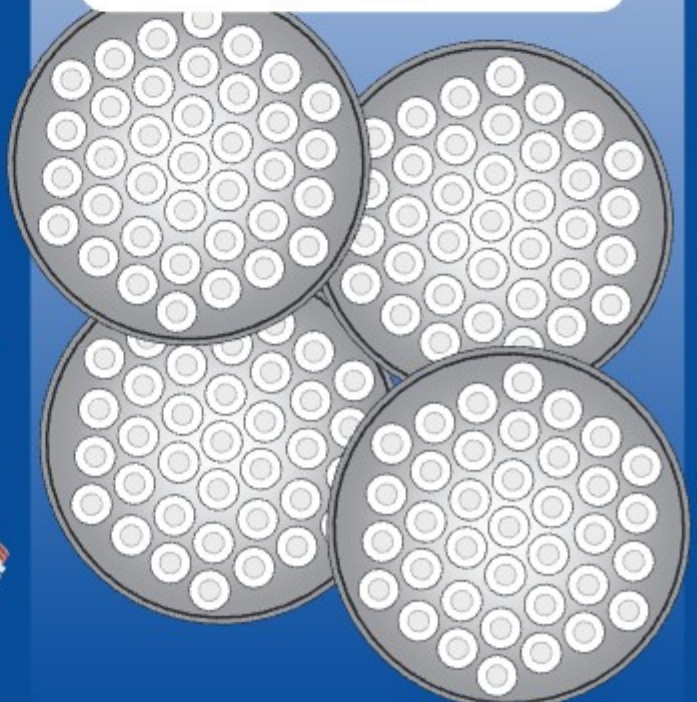

Inox High Flow Filter Housings

Features

Manufactured from 316L stainless steel, the SPECTRUM Inox High Flow range is supplied with a host of easy-to-use features such as swing bolt and Davit arm closure mechanisms for reduced change out time, included pressure gauges for accurate pressure drop monitoring, a housing top plate to reduce bypass and flanged inlet and outlet ports to suit typical industry pipework.



Gauges

Pressure gauges (supplied as standard) optimise service life, acting as a visual indicator for cartridge changeout.



Pressure Vent

Used to depressurise the housing and allow safe handling.

Housing Body

316L stainless steel body with glass beaded finish provides durability.



Top Plate

Once cartridges are installed a top plate is fitted for safety and security to prevent bypass.

Mounting Legs

Heavy duty, stainless steel, saddle style legs bolt to the floor, offering stability and security.

Drains

Enables efficient draining of the unit to allow quick and easy changeout.

Cartridge Compatibility

SPECTRUM High Flow filters have a high surface area developed to suit large scale applications where maximum efficiency is required.





Davit Arm Assembly

Manufactured as standard on all multi-round systems, the Davit arm assembly enables quick cartridge changeout and safe operation.

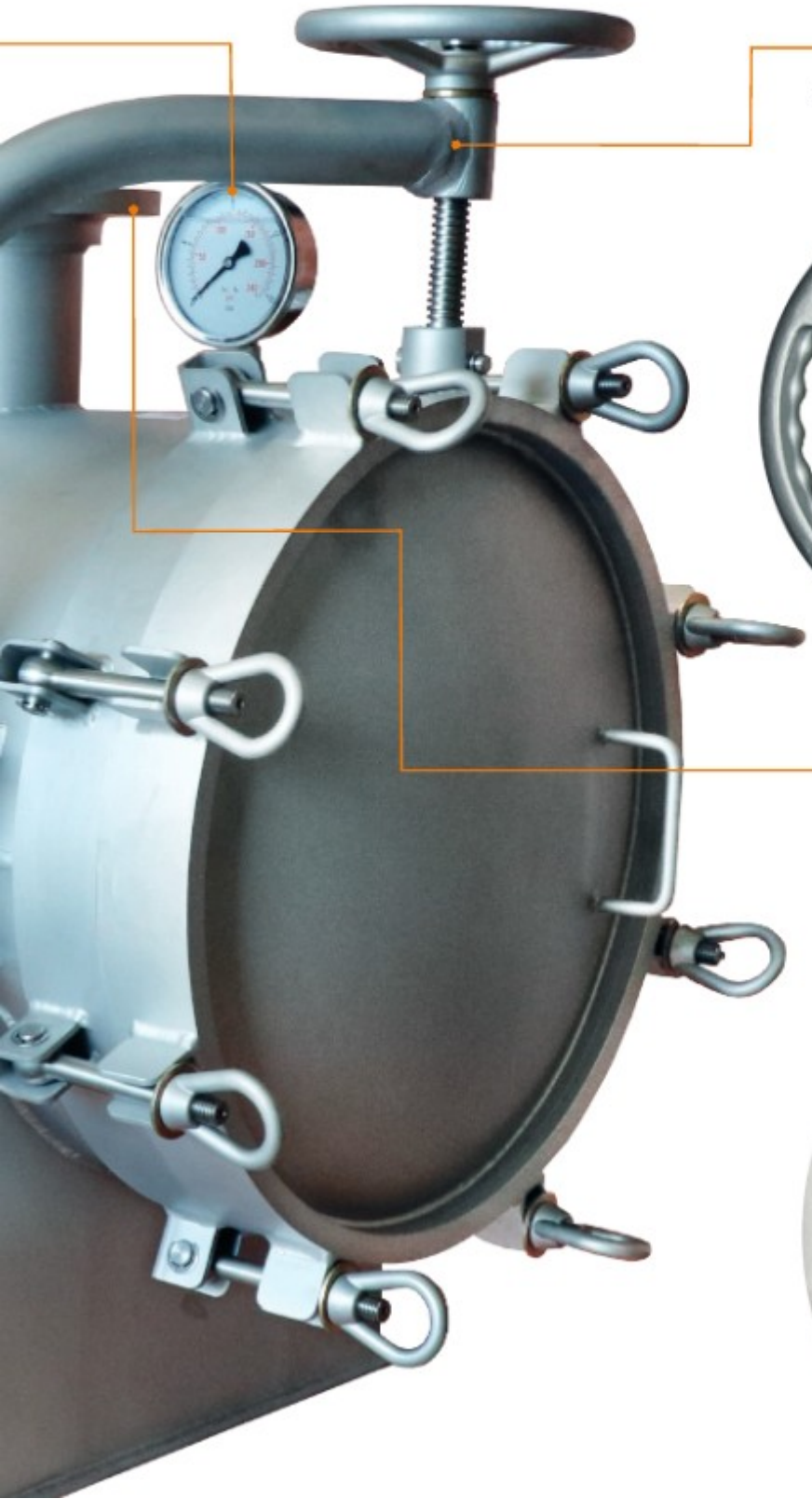

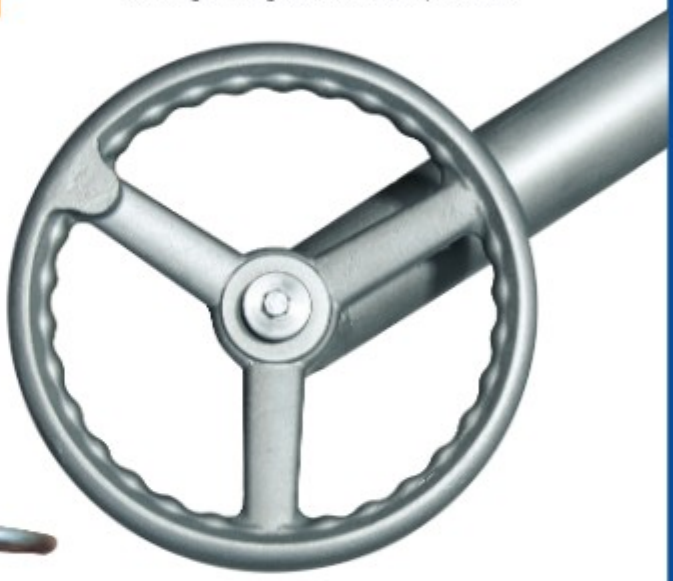

Flange

Supporting easy engineering and high flow rates, all multi-round systems come with flanged connections.



High Flow Filter Housing

1 Round x 40" Cartridge

Requiring no tools for fast and easy filter changeout, this single round housing provides an option to a regular diameter multi-cartridge housing at 15% of the capital cost and almost a 50% reduction in footprint. The only housing in the highflow housing range to have adjustable legs allowing control over the vessels height, making installation simple and stress-free.

Up to 1300 lpm



SPECTRUM

FDA
Compliant Materials

PED
Compliant
Article 4, Paragraph 3
Group 2 Liquids

DWI
Approved

Technical Drawing

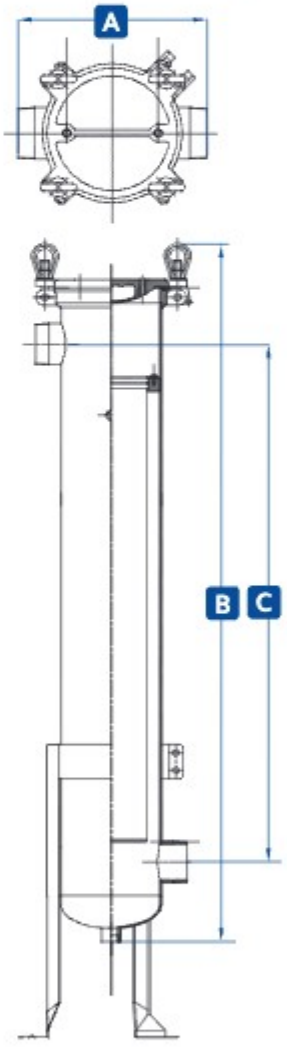

Dimensions (mm)			
Housing	A	B	C
PFH-SGB-1HF-40	330	1529	1135

Key Features

- Swing bolt closure for easy changeout
- Adjustable legs to aid installation
- Drain port as standard, to allow for easy emptying of system and to help avoid contact with fluid
- Pressure gauges to optimise cartridge life

Flow Rate (lpm)





Pressure Vent

Depressurise housing for safe and easy changeout.

Swing Bolt Closure

Hinged head design for safe and secure sealing.

Inlet

3'' BSPM.

Top Plate

Ensures simple installation and support.

Pressure Gauges

Provided with pressure gauges to enable quick reference to pressure drop.

Housing Body

316L stainless steel body with glass beaded finish provides durability and corrosion resistance.

Cartridge

High flow cartridge provides increased flow and dirt loading.

Outlet

3'' BSPM.

Adjustable Legs

Heavy duty, stainless steel legs bolt to the floor for security.

Drain

Allows for easy and quick evacuation of the fluid within.

Specification

Port Sizes (BSPM")

3

Cartridge Compatibility (")

40

High Flow Cartridge

End-Cap Compatibility

SOE

Single Open Ended High Flow

Temperature (°C)

120

Pressure Rating (bar)*

10

Materials

Head - 316L Cast S/S - Glass Bead Finish
Body - 316L S/S - Glass Bead Finish
Gasket - Buna-N

* Hydrostatic Pressure Rating

Code	Description
PFH-SGB-1HF-40-3-G	SPECTRUM High Flow Housing 316 SS 1 Round 40" with 3" Ports

High Flow Filter Housing

2 Round x 40" Cartridge

For a 75% footprint increase over the single round housing, the two round High Flow delivers a 100% greater flow rate. Benefitting from a Davit arm assembly which provides simple and safe lid maneuvering, this housing accommodates two cartridges which are held in place with a holding plate for security.

Up to 2600 lpm



SPECTRUM

FDA
Compliant Materials

PED
Compliant
Article 4, Paragraph 3
Group 2 Liquids

DWI
Approved

Technical Drawing

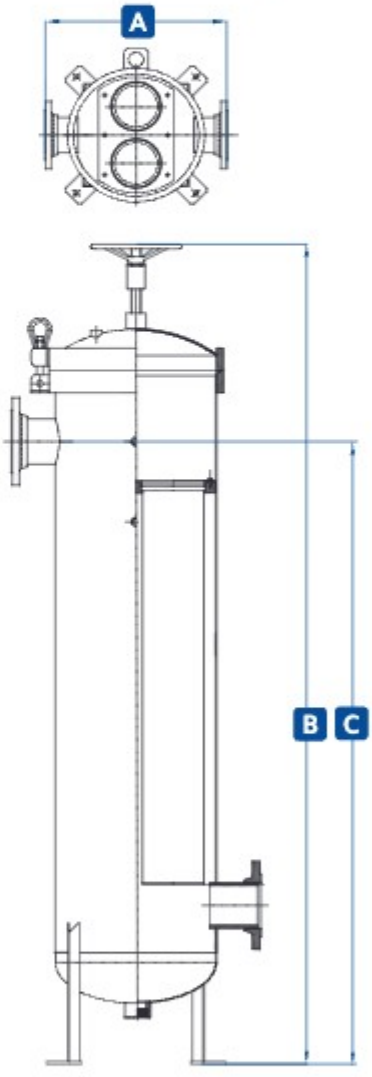

Dimensions (mm)			
Housing	A	B	C
PFH-SGB-2HF-40	580	2068	1570

Key Features

- Davit arm assembly for safe and easy changeout
- Swing bolt closure for additional security
- Small footprint for an increased flow rate

Flow Rate (lpm)





Pressure Vent
Depressurise housing for safe and easy changeout.

Davit Arm Assembly
Ensuring the housing lid can be maneuvered safely.

Swing Bolt Closure
For quick and efficient changeout.

Inlet
4" DN100.

Top Plate
Ensures simple installation and support.

Pressure Gauges
Provided with pressure gauges to enable quick reference to pressure drop.

Housing Body
316L stainless steel body with glass beaded finish provides durability and corrosion resistance.

Cartridge
High flow cartridge provides increased flow and dirt loading.

Outlet
4" DN100.

Mounting Legs
Heavy duty, stainless steel legs bolt to the floor for security.

Drain
Allows for easy and quick evacuation of the fluid within.

Specification

Port Sizes (Flange")

4

Cartridge Compatibility (")

40

High Flow Cartridge

End-Cap Compatibility



Single Open Ended High Flow

Temperature (°C)

120

Pressure Rating (bar)*

10

Materials

Head - 316L Cast S/S - Glass Bead Finish
Body - 316L S/S - Glass Bead Finish
Gasket - Buna-N

* Hydrostatic Pressure Rating

Code	Description
PFH-SGB-2HF-40-4F-G	SPECTRUM High Flow Housing 316 SS 2 Round 40" with 4" Flange

High Flow Filter Housing

4 Round x 40" Cartridge

Doubling the flow capacity of the 2 round housing, the 4 round vessel is the first in the range capable of producing over 5,200 lpm and are horizontal in orientation. With the vessel opening being lower to the ground, this design provides quick and simple cartridge handling with reduced manpower required for cartridge changeout.

Up to 5200 lpm



FDA
Compliant Materials

PED
Compliant
Article 4, Paragraph 3
Group 2 Liquids

DWI
Approved

SPECTRUM

Technical Drawing

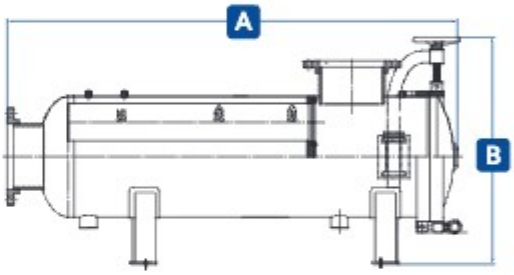

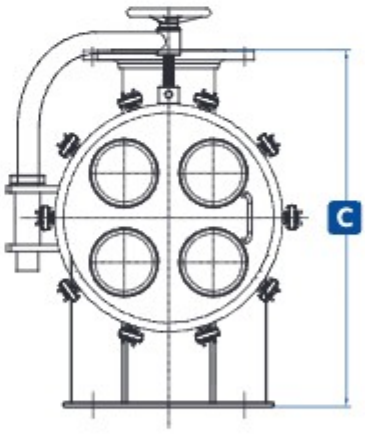

Dimensions (mm)			
Housing	A	B	C
PFH-SGB-4HF-40	1766	948	850

Key Features

- Horizontal design allows for quick and easy changeout
- Baskets installed to provide cartridge support during use
- Davit arm assembly swings open for easy access to cartridges
- Two drain ports allow for efficient emptying

Flow Rate (lpm)



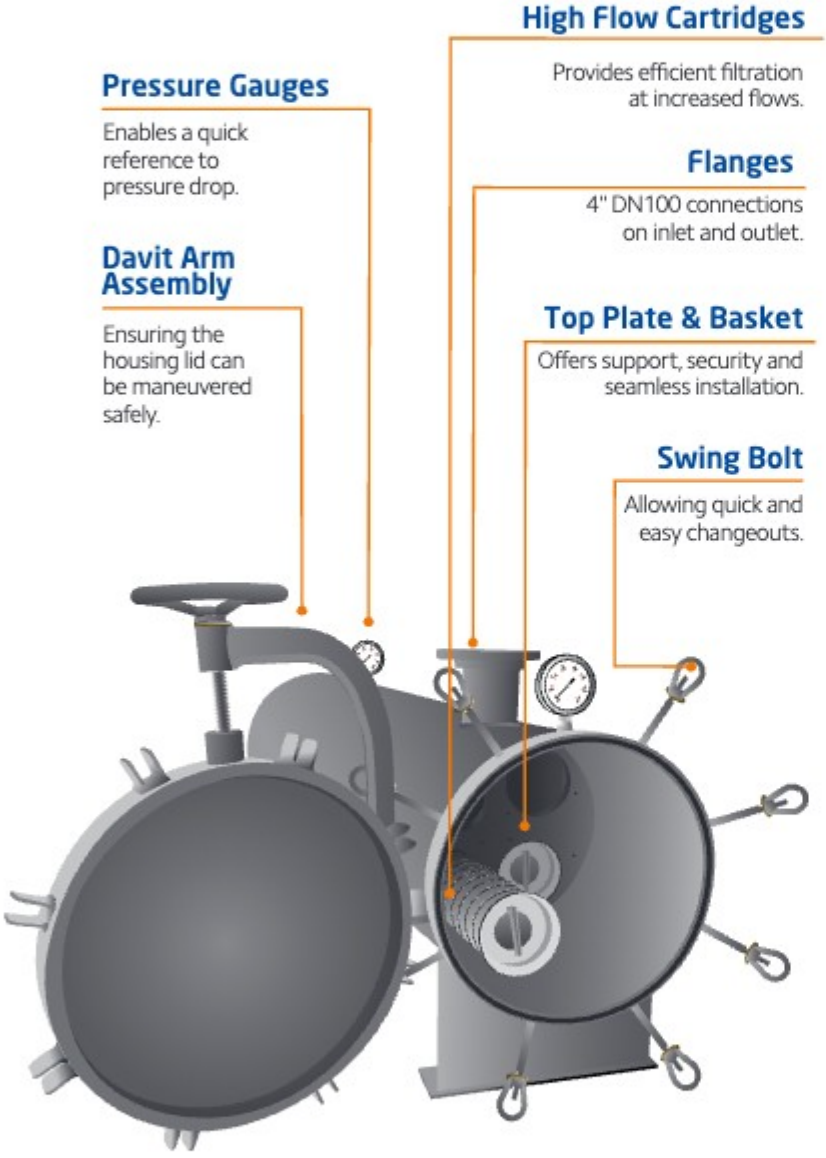

Specification

Port Sizes (Flange")

4

Cartridge Compatibility (")

40

High Flow Cartridge

End-Cap Compatibility

SOE

Single Open Ended High Flow

Temperature (°C)

120

Pressure Rating (bar)*

10

Materials

Head - 316L Cast S/S - Glass Bead Finish
Body - 316L S/S - Glass Bead Finish
Gasket - Buna-N

* Hydrostatic Pressure Rating

Code	Description
PFH-SGB-4HF-40-4F-G	SPECTRUM High Flow Housing 316 SS 4 Round 40" with 4" Flange

High Flow Filter Housing

6 Round x 40" Cartridge

The largest housing in the 40" cartridge size, these 6 round vessels come with 6" DN150 flanges to facilitate the flow rate potential of nearly 8,000 lpm. Including the numerous features which are present in the rest of the range, this housing would require over 100 standard cartridges across 3 housings to achieve the equivalent flow rates.

Up to 7800 lpm



FDA
Compliant Materials

PED
Compliant
Article 4, Paragraph 3
Group 2 Liquids

DWI
Approved

SPECTRUM

Technical Drawing

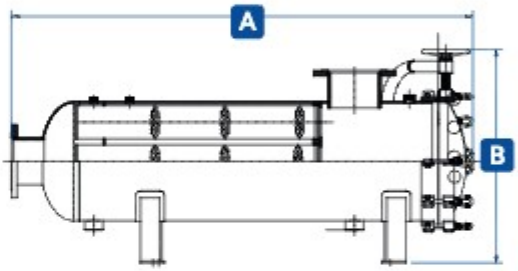

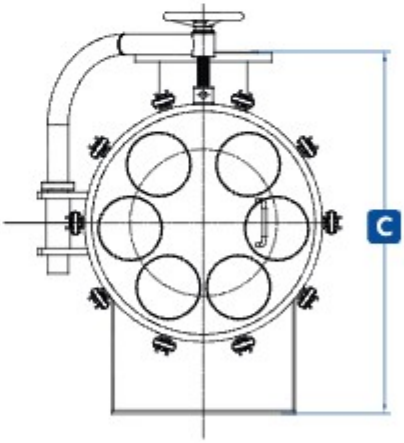

Dimensions (mm)			
Housing	A	B	C
PFH-SGB-6HF-40	1785	998	900

Key Features

- Horizontal design allows for quick and easy changeout
- Baskets installed to provide cartridge support during use
- Davit arm assembly swings open for easy access to cartridges
- Two drain ports allow for efficient emptying

Flow Rate (lpm)



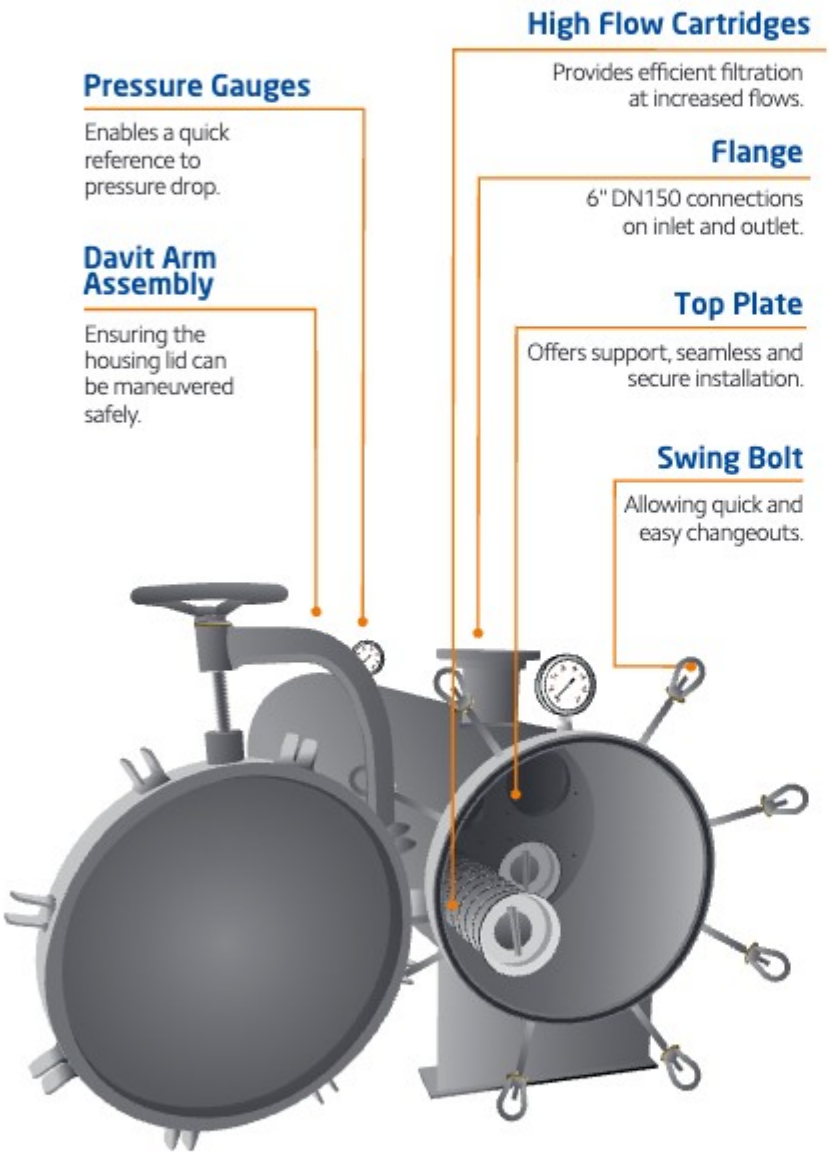

Specification

Port Sizes (Flange")

6

Cartridge Compatibility (")

40

High Flow Cartridge

End-Cap Compatibility



Single Open Ended High Flow

Temperature (°C)

120

Pressure Rating (bar)*

10

Materials

Head - 316L Cast S/S - Glass Bead Finish
Body - 316L S/S - Glass Bead Finish
Gasket - Buna-N

* Hydrostatic Pressure Rating

Code	Description
PFH-SGB-6HF-40-6F-G	SPECTRUM High Flow Housing 316 SS 6 Round 40" with 6" Flange

High Flow Filter Housing

Multi Round - 7 x 40" Cartridges

Achieving true high flow capabilities, the 7 round vessel is the largest of the SPECTRUM Inox range accepting high flow cartridges of 40" length and fitted with 6" DN150 flanges to achieve flow rates in excess of 9,100 lpm.

Up to 9,100 lpm



FDA
Compliant Materials

PED
Compliant
Article 4, Paragraph 3
Group 2 Liquids

DWI
Approved

SPECTRUM

Technical Drawing

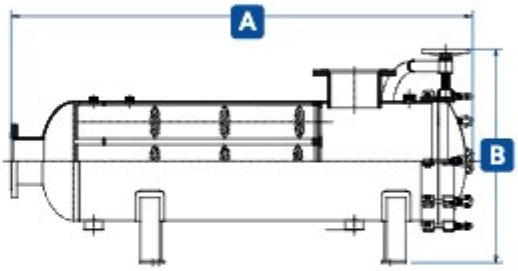

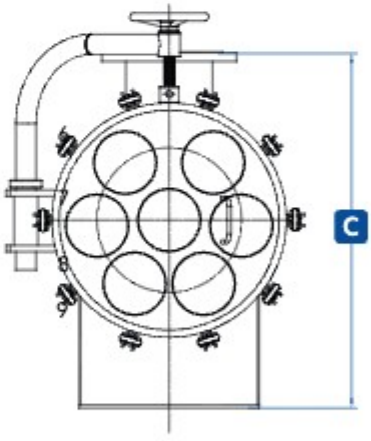

Dimensions (mm)			
Housing	A	B	C
PFH-SGB-7HF-40	1930	998	900

Key Features

- Horizontal design allows for quick and easy changeout
- Baskets installed to provide cartridge support during use
- Davit arm assembly swings open for easy access to cartridges
- Two drain ports allow for efficient emptying

Flow Rate (lpm)



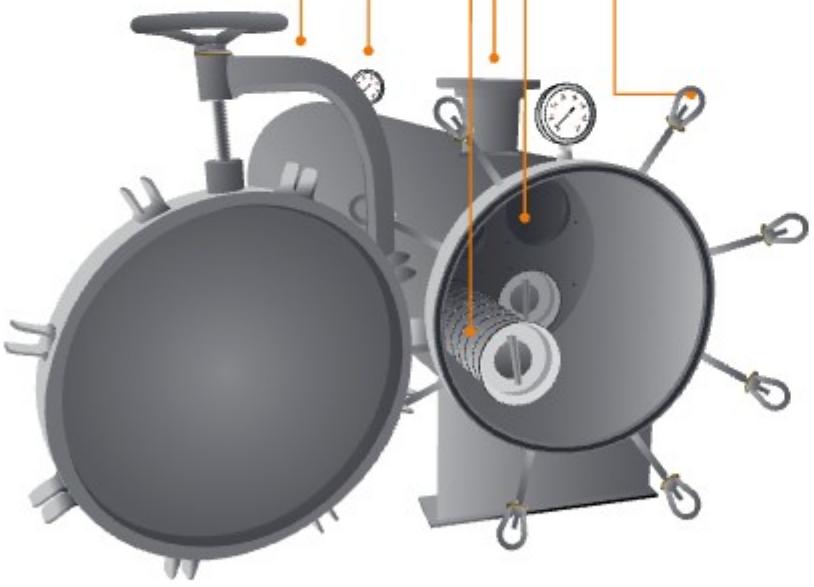

Specification

Port Sizes (Flange")

6

Cartridge Compatibility (")

40

High Flow Cartridge

End-Cap Compatibility

SOE

Single Open Ended High Flow

Temperature (°C)

120

Pressure Rating (bar)*

10

Materials

Head - 316L Cast S/S - Glass Bead Finish
Body - 316L S/S - Glass Bead Finish
Gasket - Buna-N

* Hydrostatic Pressure Rating

Code	Description
PFH-SGB-7HF-40-6F-G	SPECTRUM High Flow Housing 316 SS 7 Round 40" with 6" Flange