FLOW UP TO 4000 LPM

Multi-round heavy duty housings are suited to high-volume and high-dirt loading applications. Available in various port sizes, with flexible options for the number of bags accommodated within the housing. Compatible with industry standard size 2 bag filters, the PBH-SGB is constructed from 316L stainless steel which offers durability and has a glass bead finish that hardens the housing surface, increasing resistance to wear and corrosion. Each housing utilises a swing-bolt closure system, davit arm assembly and pressure gauges supplied as standard to simplify bag filter operation and change outs.

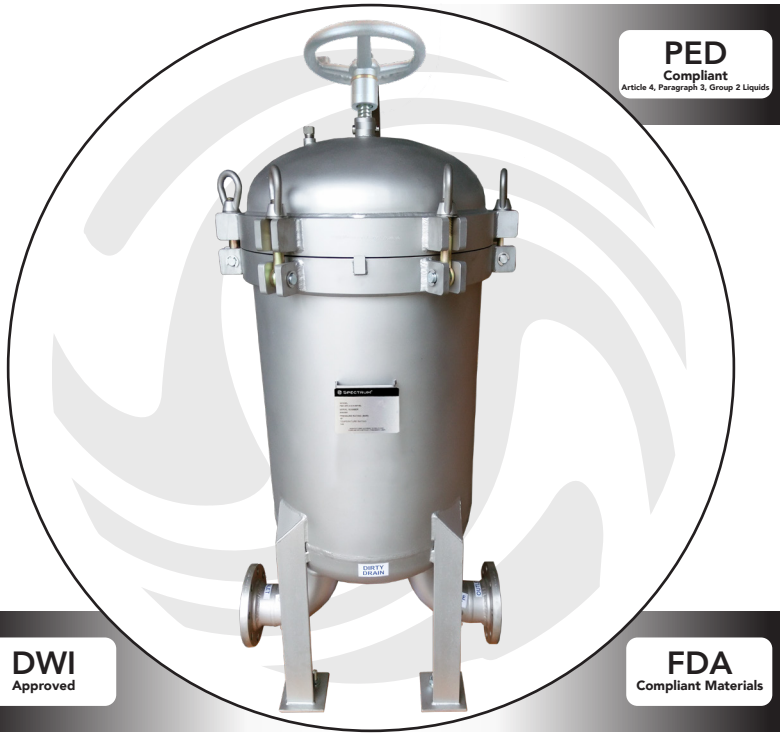

MATERIALS OF CONSTRUCTION

Body & Lid:	316L Stainless Steel
Basket:	316L Stainless Steel
Legs:	304 Stainless Steel
O-rings:	Buna-N

TECHNICAL DATA

Pressure Rating (bar)	10
Temperature Rating (°C)	121
Flow Rate (LPM)	2 - 1300
	3 - 1950
	4 - 2600
	5 - 3250
	6 - 3900

DIMENSIONS

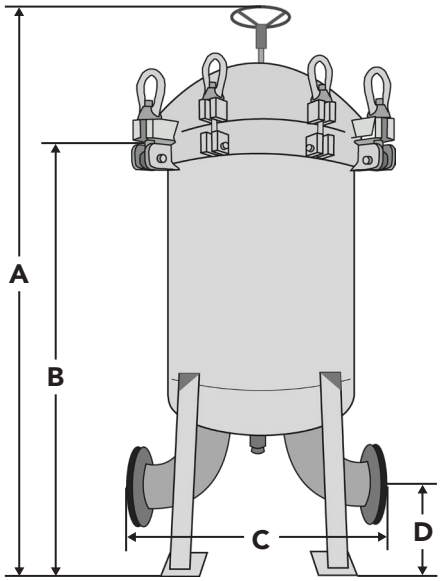

Dimensions (mm)				
Code	**A**	**B**	**C**	**D**
PBH-SGB-2-2-3F-G	1459	1068	650	125
PBH-SGB-3-2-4F-G	1491	1075	718	125
PBH-SGB-4-2-4F-G	1577	1160	762	127
PBH-SGB-5-2-4F-G	1646	1041	960	150
PBH-SGB-6-2-6F-G	1776	1168	990	152

ORDERING GUIDE

Code	No. of Bags	Bag Size	Port Size (")	Gauge Ports	Gauges	Mounting Legs
PBH-SGB-2-2-3F-G	2	2	3" DN80	✔	✔	✔
PBH-SGB-3-2-4F-G	3	2	4" DN100	✔	✔	✔
PBH-SGB-4-2-4F-G	4	2	4" DN100	✔	✔	✔
PBH-SGB-5-2-4F-G	5	2	4" DN100	✔	✔	✔
PBH-SGB-6-2-6F-G	6	2	6" DN150	✔	✔	✔

PRODUCT RANGE

The below products have often been associated with this product.



Standard Size 1&2

Flow up to 600 lpm



Premier Size 3&4

Flow up to 150 lpm



Premier Size 1&2

Flow up to 600 lpm



Multi Round

Flow up to 4000 lpm